PROFESSIONAL LOUDSPEAKERS
Made in Italy

18HP1022
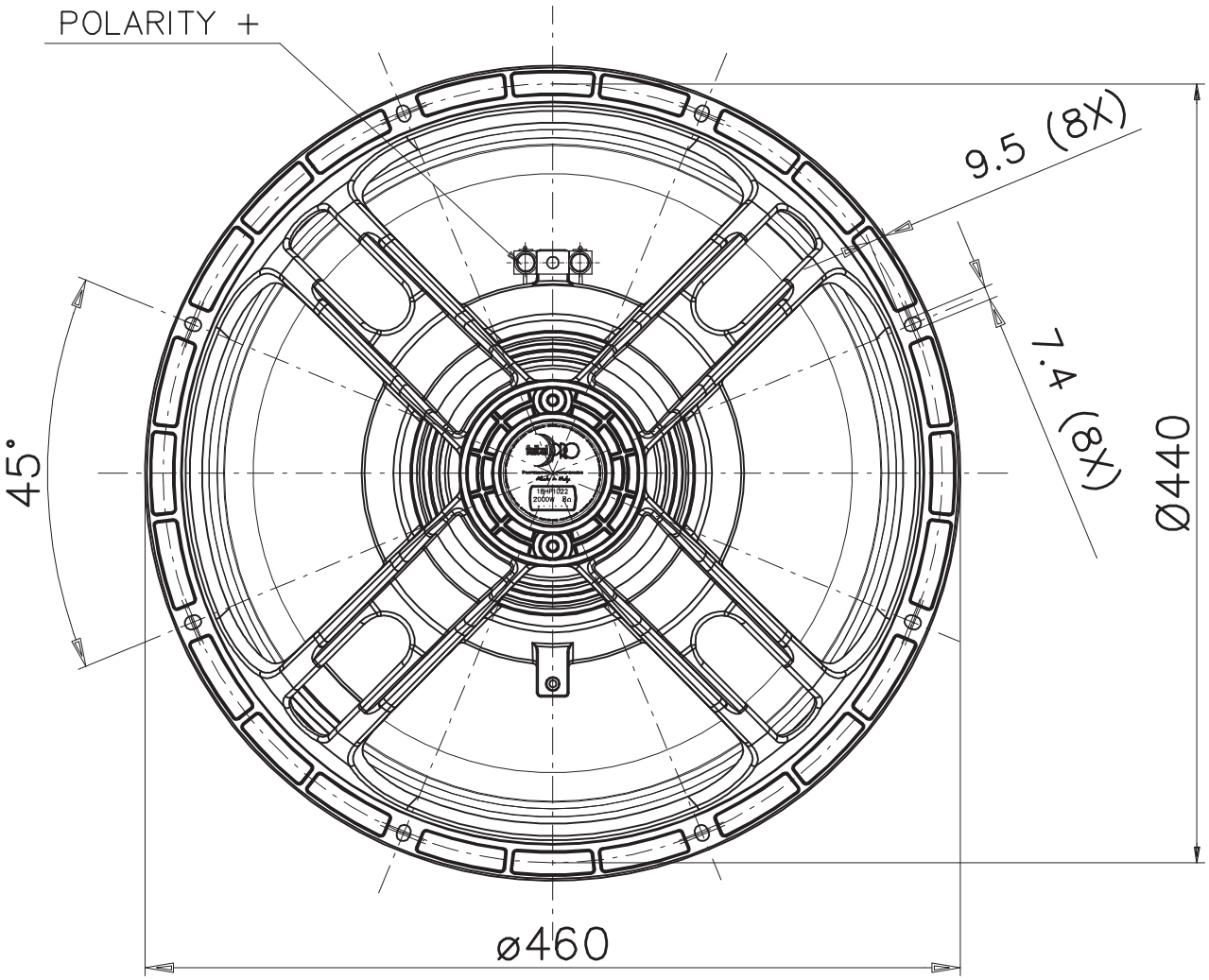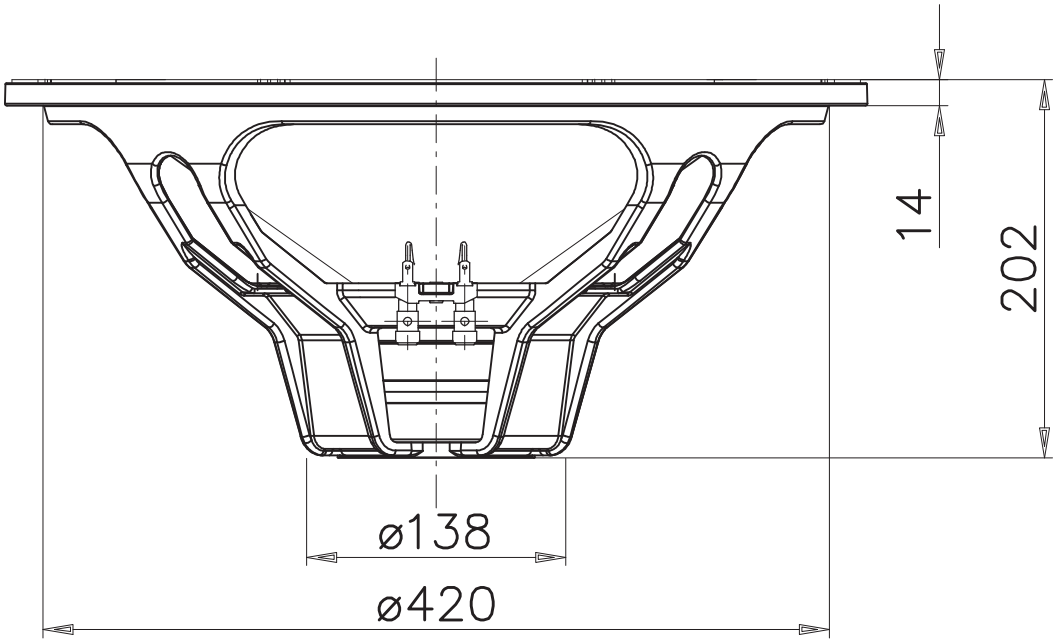
18” - 1000 W - 98 dB - 8Ω